LINCOLN

Consistency You Can Count On

Digital Countertop Conveyor Oven
Series 2500

Domestic and International Service Manual

Original Document

Document #: LIN_EO_SM_DIGCT_S2500_DOM&INTL_4606010 – 07/21

WELBILT

Safety Notices

As you work on Lincoln equipment, be sure to pay close attention to the safety notices in this manual. Disregarding the notices may lead to serious injury and/or damage to the equipment.

Throughout this manual, you will see the following types of safety notices:

⚠ DANGER

Text in a Danger box alerts you to an eminent personal injury situation. Be sure to read the Danger statement before proceeding, and work carefully.

⚠ Warning

Text in a Warning box alerts you to a potential personal injury situation. Be sure to read the Warning statement before proceeding, and work carefully.

⚠ Caution

Text in a Caution box alerts you to a situation in which you could damage the equipment. Be sure to read the Caution statement before proceeding, and work carefully.

Procedural Notices

As you work on Lincoln equipment, be sure to read the procedural notices in this manual. These notices supply helpful information which may assist you as you work.

Throughout this manual, you will see the following types of procedural notices:

Important

Text in an Important box provides you with information that may help you perform a procedure more efficiently. Disregarding this information will not cause damage or injury, but it may slow you down as you work.

NOTE: Text set off as a Note provides you with simple, but useful, extra information about the procedure you are performing.

Read These Before Proceeding:

⚠ DANGER

Do not install or operate equipment that has been misused, abused, neglected, damaged, or altered/ modified from that of original manufactured specifications.

⚠ Warning

Improper installation adjustment, alteration, service or maintenance can cause property damage, injury or death. Read the instructions thoroughly before installing or servicing this equipment.

⚠ Warning

Authorized Service Representatives are obligated to follow industry standard safety procedures, including, but not limited to, local/national regulations for disconnection / lock out / tag out procedures for all utilities including electric, gas, water and steam.

⚠ Warning

Never use a high-pressure water jet for cleaning or hose down or flood interior or exterior of units with water. Do not use power cleaning equipment, steel wool, scrapers or wire brushes on stainless steel or painted surfaces.

⚠ Caution

Maintenance and servicing work other than cleaning as described in this manual must be done by authorized service personnel.

Table of Contents

Section 1
General Information

Model Number Key **7**

Section 2
Installation

Exterior Dimensions – Series 2500 ..... **9**
Installation Requirements **10**
- Electrical Code Requirements 10
- Spacing Requirements 10
- Ventilation Requirements 10

Installation **10**
- Electrical Grounding Instructions 11

Assembly Instructions **11**
Stacking Instructions **12**
Mounting Instructions **12**
Installation Checklist **13**
- Checklist 13

Section 3
Operation

Sequence of Operation **15**
- Power Supply 15
- Control Box Auto Cool Down 15
- Main Fan Circuit 15
- Heating Circuit 15
- Oven Control 15
- Conveyor Drive 15
- Amber Light 15

Section 4
Maintenance

Operator Maintenance **17**
Daily Cleaning **17**
Weekly Cleaning **17**
Monthly Cleaning **17**
Conveyor Removal & Reinstallation **18**
Finger Removal & Disassembly for Cleaning **19**
- Disassembly 19
- Disassemble Fingers for Cleaning 19
- Reassembly 19

Preventive Maintenance **19**

Section 5
Troubleshooting

Troubleshooting Guide **21**

Section 6
Controls

Operating Instructions **25**
Power-Up the Oven 25
Change Belt Direction 25
Shutdown 25
Programming **26**
Programming the Four Menu Preset Buttons 26
Programming the Manual Mode 26
Programming the Subset Menu 27

Section 7
Component Procedures

Oven Back **29**
Oven Hi-Limit **29**
Thermocouple **29**
Power Switch **29**
Motor Capacitor **30**
Main Fan **30**
Heating Element **30**
Air Pump **30**
Fan Motor **30**
Conveyor **31**
Conveyor Sprockets **31**
Conveyor Motor **31**
Transformer **31**
Contactor **32**
Conveyor Bearings **32**
Main Control **32**
Proportional Controller **32**
Membrane **32**
Solid State Relay **32**
Cooling Fan Thermostat **32**
Cooling Fan Motor **32**
Control Box Hi-Limit **33**
Time Delay Relay **33**
Main Fan Relay or Dual Voltage Relay **33**
Voltage Monitoring Relay **33**
Air Pressure Switch **33**
Fuse Holder **33**
DC Power Supply **33**

Section 8
Charts

Utility Specifications **35**

Section 9
Diagrams

Wiring Schematics 37
Model 2500 SN 1606100100720 to SN 2012100100663 37
Model 2500 SN 2012100100664 and Above 38
Models 2501, 2502 39
Models 2504, 2510. 40
Model 2505 41
Model 2507 42
Models 2508, 2509 43
Model 2512 44
Model 2514 45

THIS PAGE INTENTIONALLY LEFT BLANK

Section 1
General Information

Model Number Key

Example: 2501-000-U-0001620

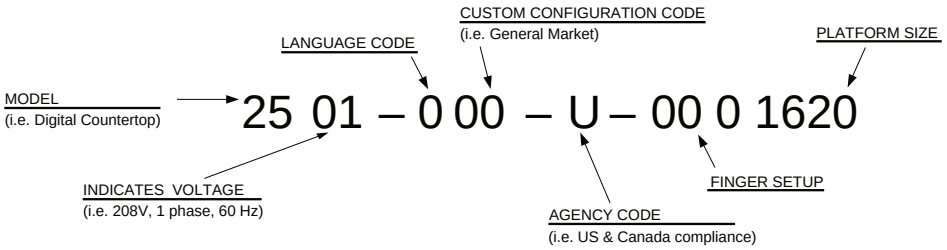

Language Code

Code	Language	Country
0	English	Dom. & Int. Default
B	French	CE – France/Luxembourg
C	German	CE – Germany
D	Italian	CE – Italy
E	Spanish	CE – Spain
F	English	CE – UK/India/Africa/Hungary
G	Spanish	Mexico/Latin America
H	Portuguese	CE – Portugal
I	Not Used	---
J	Danish	CE – Denmark
K	Dutch & French	CE – Belgium
L	Dutch	CE – Netherlands
M	Greek	CE – Greece
N	Finnish	CE – Finland
O	Restricted	---
P	Norwegian	CE – Norway
Q	English	Japan
R	Swedish	CE – Sweden
S	English	Australia
T	Mandarin	China
U	Restricted	---
V	English	Pacific Rim/Korea
W	English	Middle East/Africa
X	Not Used	---
Y	Not Used	---
Z	Not Used	---

Agency Code

Code	Agency
N	No agency
E	CE & RoHS compliance combined
U	US & Canada compliance only
A	Advantage style oven
B	Australia AGA

THIS PAGE INTENTIONALLY LEFT BLANK

Section 2
Installation

Exterior Dimensions – Series 2500

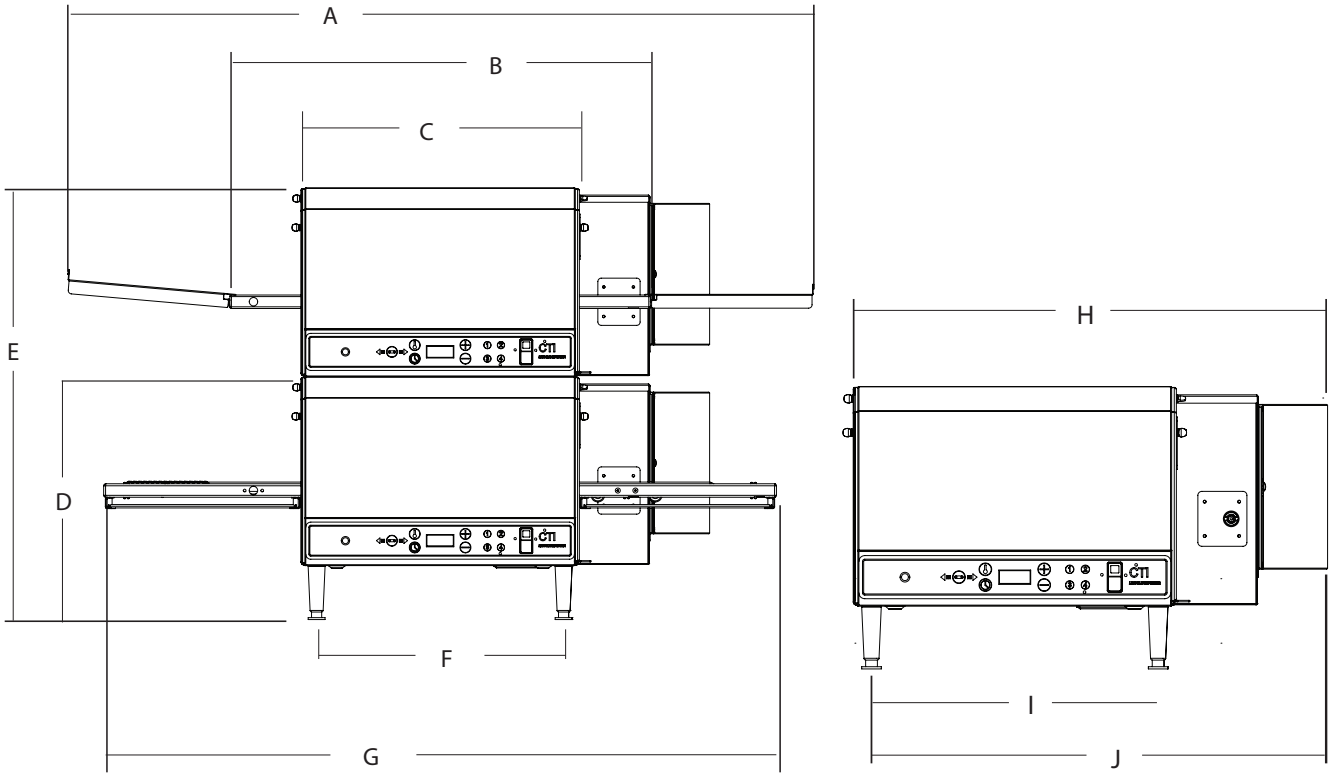

	A*	B**	C	D	E	F	G***	H	I	J
Inches	51.125	31.10	20.50	17.9375	31.875	18.25	49.75	31.25	18.9375	27.50
(mm)	(1298.6)	(789.9)	(520.7)	(455.6)	(809.6)	(463.6)	(1263.7)	(793.8)	(481.0)	(698.5)

* A dimension pertains to a unit with standard conveyor and 12" (304 mm) take-off shelves included on each end.
** B dimension pertains to a unit with standard length conveyor.
*** G dimension pertains to a unit with an extended conveyor only.

NOTE: Specifications subject to change without notice.

NOTE: Do not install this (these) oven(s) in any area with an ambient temperature in excess of 95°F (35°C). Doing so will cause damage to unit.

Installation Requirements

⚠ DANGER

All utility connections and fixtures must be maintained in accordance with local and national codes.

ELECTRICAL CODE REQUIREMENTS

⚠Warning

This appliance must be grounded and all field wiring must conform to all applicable local and national codes. Refer to rating plate for proper voltage. It is the responsibility of the end user to provide the disconnect means to satisfy the authority having jurisdiction.

⚠Warning

This equipment must be positioned so that the plug is accessible unless other means for disconnection from the power supply (e.g., circuit breaker or disconnect switch) is provided.

⚠Caution

In order to avoid a hazard due to inadvertent resetting of the thermal cutout, this appliance must not be supplied through an external switching device, such as a timer or connected to a circuit that is regularly switched on and off by the utility.

IN USA: When installed, this appliance must be electrically grounded and its installation must comply with the National Electric Code, ANSI-NFPA 70, latest edition, the manufacturers' installation instructions, and applicable local municipal building codes.

IN CANADA: All electrical connections are to be made in accordance with CSA C22.21 latest version – Canadian Electrical Code Part 1 and/or local codes.

ALL OTHER COUNTRIES: Local electrical codes will prevail.

1. Strain relief is provided with each oven. International Dealer/Distributors provide applicable power cord/plug for each customer.
2. All pole disconnection switch must have 3 mm open contact distance.
3. To prevent electrical shock, an equal potential bonding ground lug is provided in the back. This allows the oven to be connected to an external bonding system.
4. If used as double-stack and each oven has its own disconnection switch, all switches should be close together.

SPACING REQUIREMENTS

The oven must have 6 inches (152 mm) of clearance from combustible surfaces. In case other equipment is located on the right side of oven, a minimum clearance of 24 inches (609 mm) is required from that equipment.

FOR ALL OVENS: A 24-inch (609 mm) clearance at the rear of the oven must be obtainable for service access.

VENTILATION REQUIREMENTS

Local codes prevail. These are the authority having jurisdiction as stated by the NATIONAL FIRE PROTECTION ASSOCIATION, INC. in NFPA 96 latest edition.

Installation

The instructions that follow are intended as a guide for preparing for the installation of the Countertop Conveyor oven. First and foremost, each crate should be examined before signing the Bill of Lading to report any visible damage caused during shipment in transit, and to account for the proper number of crates.

IF THERE IS APPARENT DAMAGE:

UNITED STATES AND CANADA: Arrangements should be made to file a claim against the carrier, as Interstate Commerce Regulations require that the consignee initiate a claim.

ALL SHIPMENTS TO OTHER COUTRIES: Freight terms will be developed and extended on an individual basis.

Proper and secure storage facilities should be arranged for the oven(s). If necessary, protect it from outdoor or damp conditions at all times before installation.

ELECTRICAL GROUNDING INSTRUCTIONS

⚠Warning

Domestic

As it pertains to domestic model units, this appliance is equipped with a three-prong (grounding) plug for your protection against shock hazard and should be plugged directly into a properly grounded three-prong receptacle. Do not cut or remove the grounding prong from this plug.

⚠Warning

International (CE)

This appliance must be properly grounded at time of installation. Failure to ensure that this equipment is properly grounded can result in electrocution, dismemberment or fatal injury.

⚠Warning

If the supply cord appears to be damaged, do not attempt to operate unit. Contact a service agent or qualified electrician to repair.

Assembly Instructions

Install legs as shown.

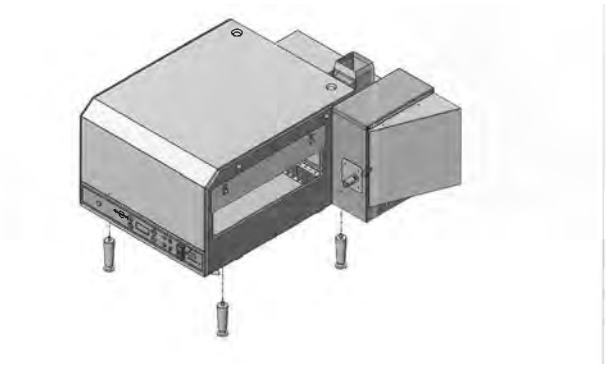

⚠Caution

Legs MUST be installed to ensure proper operation! Failure to do so will result in damage to unit and denied warranty claims.

⚠Caution

Oven must be operated on an approved base only. When utilizing a double-stack configuration of ovens, the bottom unit must always be mounted on the legs provided.

⚠Caution

Before applying power to the oven, check to ensure that the finger assemblies and air duct panels (upper and lower) are properly seated and have not become dislodged during shipment.

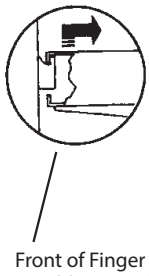

Front of Finger Assembly Properly Installed

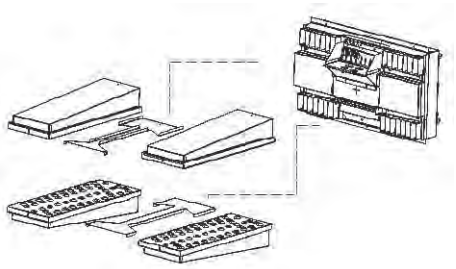

Cut-away view of interior baking chamber noting Finger and Plenum installation

Stacking Instructions

FOR SINGLE AND DOUBLE STACK UNITS

Important

When stacking ovens, be sure to remove the bottom flue cap from top oven.

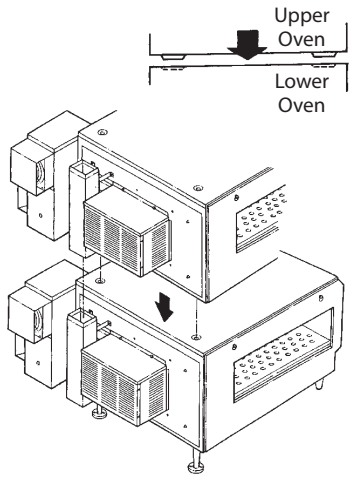

NOTE: When utilizing a double-stack configuration, stack the ovens so that the small foot on the top oven fits into the indentation on the top of the bottom oven.

⚠Caution

If you utilize a double-stack configuration, please note that each oven has its own disconnect switch. Make sure that all switches are in the OFF position before beginning maintenance or cleaning.

⚠Caution

If stacking configuration consists of analog (1300 Series), square top digital (2500 Series), or angled top digital (2500 Series) units, always stack as illustrated. Incorrect stacking arrangement may damage both ovens!

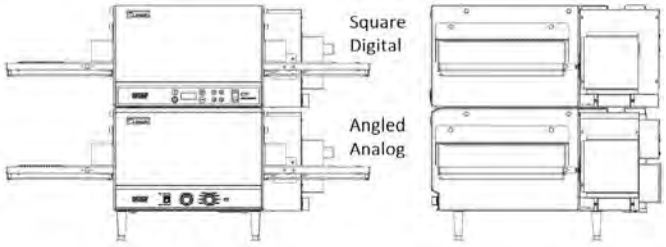

Mounting Instructions

Position the oven on the countertop and carefully mark the position of the rear legs. Remove the oven from the countertop and position the mounting rings so that the large (center) hole is where the legs of the oven were marked. Mark the position of the two small holes and remove the mounting rings.

When installing on a heavy stainless steel or wood countertop, use the four 3/16" x 9/32" drive rivets. Use a 0.218" diameter drill (7/32") and drill at least 1/2" into a wood countertop or all the way through a steel countertop so that the rear legs are in the large holes in the mounting ring.

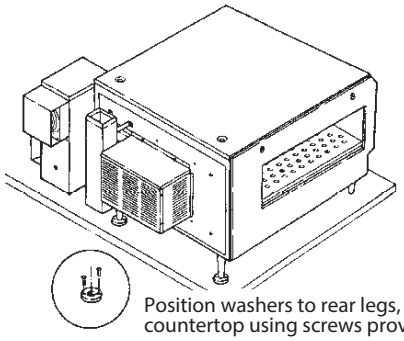

Position washers to rear legs, anchor them to countertop using screws provided.

⚠Caution

Install this unit in the most convenient locations for ease of cleaning, maintenance, and general operation. Avoid installing in locations with drafts, close proximity to grease or vapor-producing appliances or other high-ambient heat equipment.

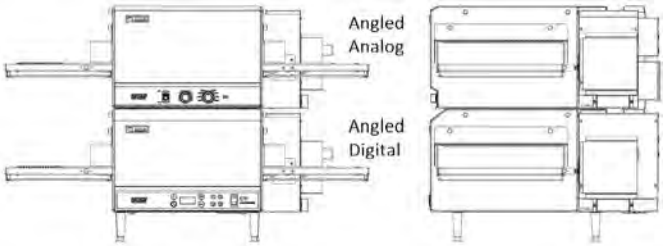

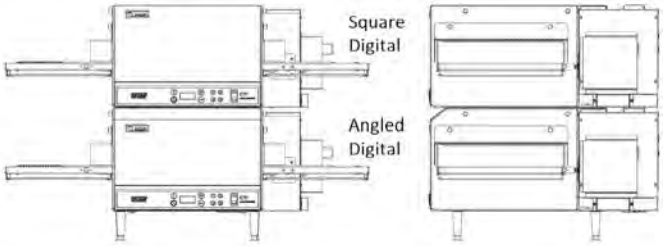

Installation Checklist

⚠ DANGER

Check all wiring connections, including factory terminals, before operation. Connections can become loose during shipment and installation.

CHECKLIST

- ☐ Are the correct clearances maintained?
- ☐ Is the bottom unit on legs?
- ☐ Are legs fastened to the counter-top with included hardware?
- ☐ If stacked, is the top unit without legs?
- ☐ If stacked, is the flue cap removed between ovens?
- ☐ Is the unit level?
- ☐ Is the unit grounded?
- ☐ Have all wiring connections including the factory connections been checked?
- ☐ Has the supply voltage been tested and verified it matches the name plate voltage?
- ☐ Are the finger assemblies correctly installed and positioned?
- ☐ Is the finger configuration written down?
- ☐ Has the unit been tested for correct operation?
- ☐ Has the owner been instructed in the correct operation of the unit?

THIS PAGE INTENTIONALLY LEFT BLANK

Section 3
Operation

Sequence of Operation

POWER SUPPLY

Electrical Power is supplied to the oven by a three conductor cord set.

- Black conductor is HOT.
- White conductor is HOT.
- Green conductor is ground.

Line voltage is supplied through the fuses (F1, F2) and line one (L1) through the manual resettable control box high limit (T1) to the ON/OFF switch, the Cooling Fan Thermostat (T2), the Cool Down Timer (TD), and to the Main Fan Relay (R2).
NOTE: 50Hz Ovens with 3PH have a third conductor that is HOT and it is only supplied to the heating circuit.

CONTROL BOX AUTO COOL DOWN

The cooling fan thermostat is connected to the axial fan that cools the control box. Line two (L2) connects to the other side of the Control Box Cooling Fan motor, bypassing the ON/OFF switch. The thermostat closes at 120°F, cycling the fan, keeping the control box below 120°F.

MAIN FAN CIRCUIT

Upon activating the ON/OFF switch, power is supplied to the Cool Down Timer (TD) through the timer (TD) to the Main Fan Relay (R2), through the relay (R2) to power the Main Fan (M1).

HEATING CIRCUIT

The heating contactor then closes, supplying line voltage to the SSR for the heater. Line voltage is then supplied to the element through the SSR as needed to maintain set point temperature.

OVEN CONTROL

Upon closing the ON/OFF switch, the transformer is supplied line voltage and then supplies 24 VAC to the control board and controls the conveyor motor. The control reads the thermocouple and cycles the SSR to the heater to maintain set point temperature. The control board also reads the input from the keypad to make adjustments for cook time and temperature.

CONVEYOR DRIVE

The control board transformer's (XR) secondary supplies 24 VAC to the control board (CNTR). The conveyor control supplies voltage to the conveyor motor (M3). 5-12 VAC is supplied to the motor (M3) through 4 wires (2 sets, A+ A- & B+ B-).

AMBER LIGHT

(model 2504 Australia only) T4 & T5 thermostats are (behind front panel). T4 is a normally closed thermostat and opens at 175°F (79°C) and resets automatically at 144°F (62°C). When open it stops 5V DC to coil of SSR. T5 is a normally open thermostat and closes at 140°F (60°C) and will open automatically at 120°F (49°C), when closed will cause the Amber Light to illuminate indicating dirty filter.

THIS PAGE INTENTIONALLY LEFT BLANK

Section 4
Maintenance

Operator Maintenance

⚠Warning

Disconnect power supply before servicing or cleaning this oven. Safeguard power so it cannot be accidentally restored. Failure to do so could result in dismemberment, electrocution, or fatal injury.

The Lincoln Countertop Impinger® Oven contains electrical components. Before cleaning the oven, switch off and disconnect the oven from the electrical supply.

No electrical components should be subjected to moisture. Therefore, it is important the oven is wiped down carefully. NEVER throw buckets of water over the oven or subject it to pressure washing from a hose or a pressure spray. If water or other liquid is spilled on the oven, make sure that none has entered the control box area before switching on. If in doubt, call your service company.

To achieve the maximum efficiency of the oven, it is necessary to keep it clean. The frequency listed is only the factory's recommendation. Your use and type of products will actually determine the frequency of cleaning.

⚠Caution

Oven must be cool. Do not use power-cleaning equipment, steel wool, or wire brushes on stainless steel surfaces.

Daily Cleaning

1. Clean exterior surfaces of the oven by wiping it down with a mild detergent and clean water, or a commercial stainless steel cleaner.
2. Clean the interior by sweeping up all loose particles, then wash with a mild detergent solution and rinse with clean water.
3. Clean the conveyor belt by wiping with a clean, water-dampened cloth to remove any baked on crust or food product.

⚠Caution

Do not use caustic or alkaline base cleaner on interior of oven. This will ruin the aluminized finish of the oven interior. On exterior of oven, removal of deposits of baked-on splatter, oil, grease, or light discolorations may be removed with any of several commercial cleaners. Consult with your local supplier.

⚠Warning

When using cleaning solutions, be sure they meet local and national health standards.

Weekly Cleaning

1. Remove conveyor, disassemble and clean. See Conveyor Removal section for more information.
2. Remove fingers, disassemble and clean. See Finger Removal section for more information.

Monthly Cleaning (model 2504 Australia only)

1. Remove grease filter at front panel.
2. Remove grease filter at control box cover.

NOTE: Grease filters are dishwasher only, no friction or abrasion cleaning. Clean both filters when the indicator light turns on or every month whichever comes first.

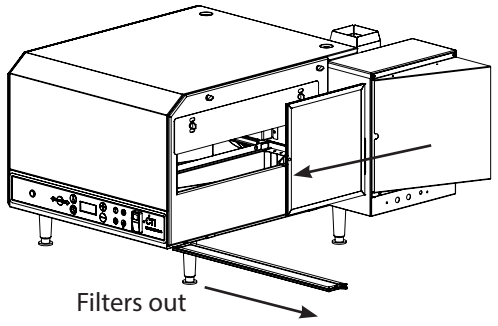

Conveyor Removal & Reinstallation

⚠ Caution

Conveyor and belt may be hot!

1. Remove extension shelves (if applicable).

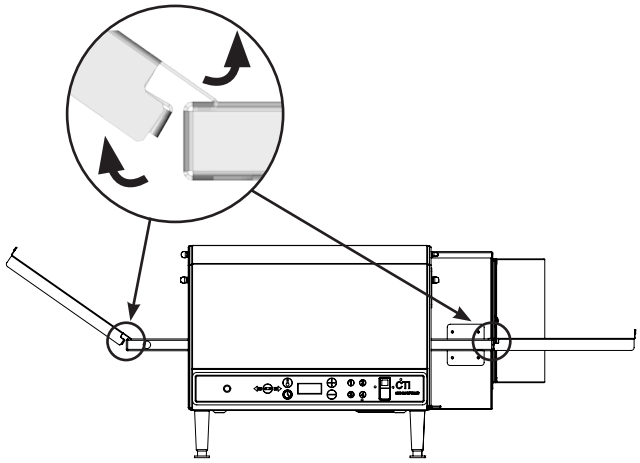

2. Push coupling away from drive lugs. Remove conveyor from oven cavity.

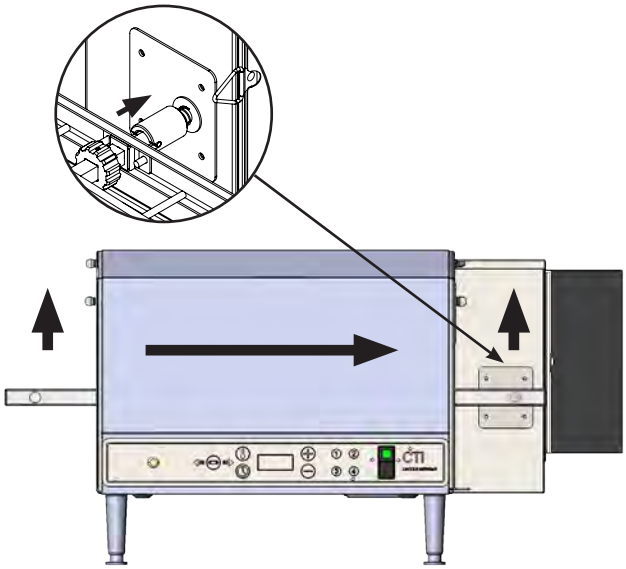

3. Reassemble in reverse order.

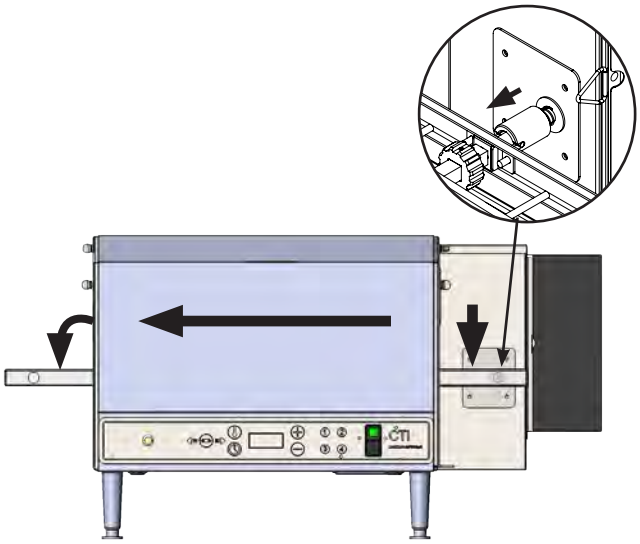

4. Install extension shelves (if applicable).

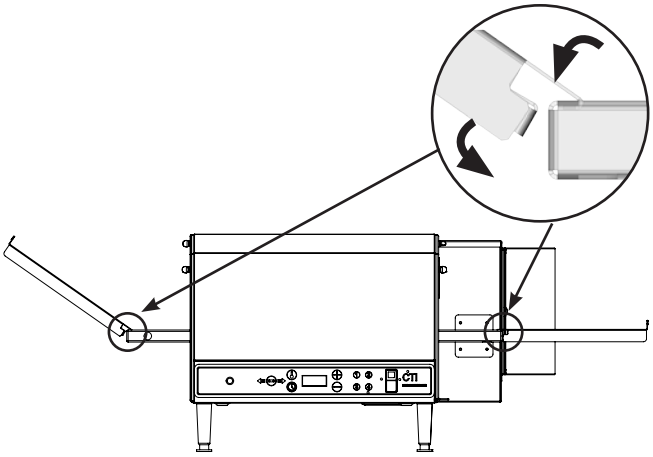

Finger Removal & Disassembly for Cleaning

DISASSEMBLY

1. Remove 1/4-20 thumbscrews (2 per panel) then pull back the panel.
2. Lift panel off lower retaining tabs.

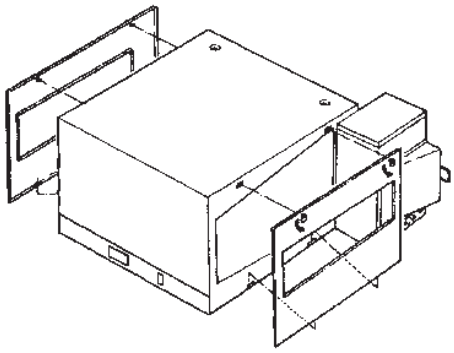

3. Lift finger assembly to clear hanger on front wall of oven. Then slide to the rear and swing out.

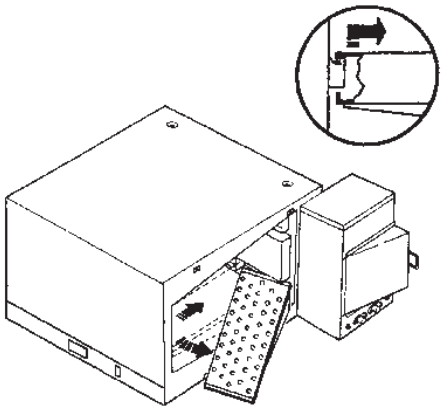

4. Remove finger assembly from oven.

DISASSEMBLE FINGERS FOR CLEANING

Slide finger cover from housing. Lift out inner columnating plate.

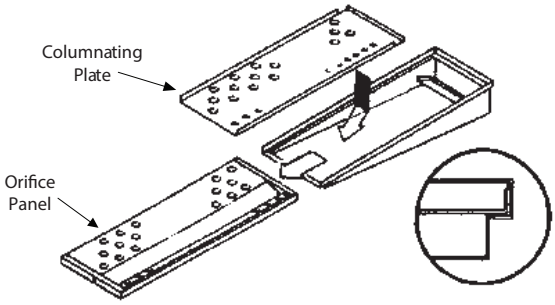

REASSEMBLY

1. Reassemble in reverse order.

NOTE: Check to ensure that the holes in the columnating plate are lined up with the holes in the orifice panel.

2. Reinstall fingers in the oven. Be sure that they are fully seated over the plenum flanges and the holes are pointing toward the conveyor.
3. Reinstall cover panels (see Disassembly).

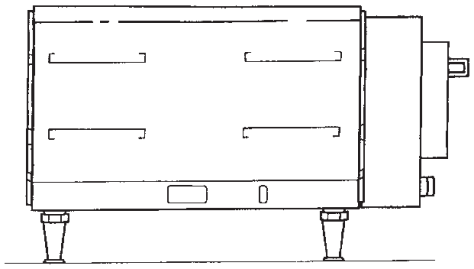

Fingers (configuration) may be different in each section of oven so verify part numbers stamped into parts prior to reassembly.

Preventive Maintenance

Although this oven has been designed to be as trouble-free as possible, periodic preventive maintenance is essential to maintain peak performance. It is necessary to keep the motors, fans, and electronic controls free of dirt, dust and debris to ensure proper cooling. Overheating is detrimental to the life of all components mentioned. The periodic intervals for preventive cleaning may vary greatly depending on the environment in which the oven is operating. You must discuss the need for preventive maintenance with your Authorized Service Agency to establish a proper program. If there are any questions that the service agency cannot answer, please contact the KitchenCare Technical Service Department at (844) 724-2273.

THIS PAGE INTENTIONALLY LEFT BLANK

Section 5
Troubleshooting

Troubleshooting Guide

Problem	Cause	Correction
Oven fan will not run	Incoming Power Supply	Check circuit breaker, reset if required. Check power plug to be sure it is firmly in receptacle. Measure incoming power, call power company if needed.
	5 Amp Fuse and Fuse Holder	Check fuse for continuity, replace if necessary. Check fuse holder for line voltage.
	Hi-Limit Thermostat, Control Box	Terminals are normally closed and open at 140°F (60°C). If open, reset thermostat and test oven for proper operation. If thermostat will not hold, and control box temperature is not exceeding 140°F (60°C), replace thermostat.
	Oven Power Switch	Check for 208-240 VAC supply to switch. If no voltage is present, trace wiring back to fuse holder and control box high limit thermostat. Check continuity between switch terminals. Replace switch as needed.
	Oven Fan Time Delay Relay and Oven Fan Relay	Check for 208-240 VAC at terminals 1 and 6 on time delay relay (TD). If no voltage is present at (TD), check wiring back to Power Switch. If voltage is present at TD 1 and 6, then check for 208-240 VAC output to oven fan relay (R2) coil. If no voltage is present, replace time delay relay. If voltage is present, check normally open (N.O.) contacts of relay (R2) for 208-240 VAC on both sides of the contact. If voltage is present to coil and to one side of the N.O. contact, but not the other, replace relay. If voltage is present then proceed.
	Main Fan Motor and Capacitor	Check for 208-240 VAC supply to the motor. If no voltage is present, trace wiring back to the relay (R2). If voltage is present but motor does not turn: WITH POWER OFF: Turn fan blade to check for locked rotor. **WARNING:** Capacitor has a stored charge, discharge before testing. Check capacitor with multimeter. Check motor for opens, shorts or grounds. Replace as needed.
No control box cooling fan	Incoming Power Supply	Check circuit breaker, reset if required. Check power plug to be sure it is firmly in receptacle. Measure incoming power, call power company if needed.
	5 Amp Fuse and Fuse Holder	Check fuse for continuity, replace if necessary.
	Control Box Hi-Limit Thermostat	Check for continuity through the switch (T2). Terminals are normally closed and open at 140°F (60°C), if open, reset thermostat and test oven for proper operation. If thermostat will not hold, and control box temperature is not exceeding 140°F (60°C), replace thermostat..
	Oven Power Switch	Check for 208-240 VAC supply to switch. If no voltage is present, trace wiring back to fuse holder and control box high limit thermostat (T2). Check continuity between switch terminals. Replace switch as needed.
	Cooling Fan Motor	Check for 208-240 VAC supply to the cooling fan. If no voltage is present, trace wiring back to the relay (R2). If voltage is present and motor does not run, check for opens, shorts or grounds. WITH POWER OFF: Check for locked rotor. Replace as needed.
Cooling fan continues to run	Control Box Thermostat	Check cooling fan thermostat. Thermostat closes at 120°F (49°C) and opens at 100°F (38°C). Please note: Thermostat will remain closed if control box temperature remains above 120°F (49°C).

Problem	Cause	Correction
Amber light is on but oven still working (model 2504 Australia only)	Elevated temp in Front Panel over 140°F T5 thermostat is now closed	Clean grease filters on Front Panel and Control Box. Thermostat will open automatically when temp falls below 120°F.
Oven will not heat	Elevated temp in Front Panel over 175°F T4 opened No power to coil of SSR (model 2504 Australia only)	Clean grease filters in Front Panel and Control Box. Thermostat closes when temp drops below 144°F
Oven will not heat (Note: Standard voltage ovens only - see next page for dual voltage ovens)	Cavity High Limit Thermostat	Check high limit thermostat (T1) for continuity through switch. Terminals are normally closed, open at 660°F (350°C). If open, push in reset button and retest. If thermostat will not hold for maximum oven temperature, and oven is not exceeding temperature control setting, check for proper location of capillary bulb in its bracket. If in proper location and Hi Limit continues to trip, replace hi limit thermostat.
	Heating Relay	Check for 208-240 VAC at coil of heating relay (R1). If no voltage is present at coil, then check Cavity Hi Limit. If voltage is present at coil, then check for 208-240 VAC at output of relay. If no output voltage, replace relay.
	Control Transformer	Check for 208-240 VAC at the primary of the transformer. If voltage is present, check for 24 VAC on secondary side. If no 24 VAC is present, check circuit breaker (CB) (if installed) on transformer. If circuit breaker is not open and still no secondary voltage, then replace transformer.
	Solid State Relay	Check for 5 VDC at terminals A1 and A2 of the solid state relay (SSR). If no voltage is present then perform thermocouple checks (thermocouple type "J" testing). If thermocouple checks good and still no voltage at terminals A1 and A2, then replace control board.
	Heating Element	If 208-240 VAC is present at output of SSR but no heat, check for 208-240 at element terminals. Check amp draws at each supply line. If voltage is present but no amp draw, replace element. 1PH, 208 Volts, 26.9 Amps, 7.7 Ohms, 5600 Watts. 1PH, 220 Volts, 25.5 Amps, 8.6 Ohms, 5600 Watts. 1PH, 240 Volts, 23.3 Amps, 10.3 Ohms, 5600 Watts. 1PH, 380 Volts, 14.7 Amps, 25.8 Ohms, 5600 Watts. 3PH, 220 Volts, 8.5 Amps, 25.9 Ohms, 1867 Watts. 3PH, 230 Volts, 8.1 Amps, 28.3 Ohms, 1867 Watts. 3PH, 240 Volts, 7.8 Amps, 30.9 Ohms, 1867 Watts.
	Thermocouple type "J" testing	WITH POWER ON AND THERMOCOUPLE ATTACHED TO THE OVEN CONTROL: Measure the DC millivolt output of the thermocouple. Refer to the chart below for readings. If these are not achieved, replace thermocouple. Temp.°F (°C) — D.C. Millivolts (Approx) 200 (93) — 3.4 250 (121) — 4.9 300 (149) — 6.5 350 (177) — 8.0 400 (204) — 9.5 450 (232) — 11.1 500 (260) — 12.6 550 (288) — 14.2 600 (316) — 15.7
Temperature Verification	Temperature Probe Placement	To verify the oven cavity temperature, insert your temperature meter probe tip under the conveyor and approximately 3/8" (10 mm) into the bottom finger #4, 3rd row from outside edge, 3rd hole from the rear. This process is also used when calibrating the oven temperature. Allow temperature in oven to stabilize for 30 minutes before calibrating. NOTE: For best result, we recommend disconnecting the conveyor drive coupling to stop the conveyor from moving. Conveyor must remain in oven for temperature test and calibration.

Problem	Cause	Correction
Oven will not heat (Note: Dual voltage ovens only - see previous page for standard voltage ovens)	Cavity High Limit Thermostat	Check high limit thermostat (T1) for continuity through switch. Terminals are normally closed, open at 660°F (350°C). If open, push in reset button and retest. If thermostat will not hold for maximum oven temperature, and oven is not exceeding temperature control setting, check for proper location of capillary bulb in its bracket. If in proper location and Hi Limit continues to trip, replace hi limit thermostat.
	Heating Relay	Check for 208-240 VAC at coil of heating relay (R1). If no voltage is present at coil, then check Cavity Hi Limit. If voltage is present at coil, then check for 208-240 VAC at output of relay. If no output voltage, replace relay.
	Control Transformer	Check for 208-240 VAC at the primary of the transformer. If voltage is present, check for 24 VAC on secondary side. If no 24 VAC is present, replace transformer.
	Dual Voltage Control Board SN 2012100100664 & Above	Check for incoming 208-240VAC at AC IN terminals 1 & 3. If no voltage, check safety relay. If voltage is present, check for 5VDC input at I/O terminals 2 & 4 when calling for heat . If no voltage, check digital control board SSR output. If voltage is present, check for 5VDC output at SSR terminals 1 & 2. If 5VDC input but no output, replace.
	Solid State Relay	Check for 5 VDC at terminals A1 and A2 of the solid state relay (SSR). If no voltage is present then perform thermocouple checks (thermocouple type "J" testing). If thermocouple checks good and still no voltage at terminals A1 and A2, then replace control board.
	Proportional Controller SN 1606100100720 to 2012100100663	Check for L1 potential at input terminal 1 of proportional controller. If no voltage is present, then check output of SSR. Check for 8.7VDC (if 240VAC) or 10.8VDC (if 208VAC) at terminals 3 and 4. If voltage is present at terminals 3 and 4 and L1 potential present at input terminal 1 but no voltage output at terminal 2, replace proportional controller.
	Dual Voltage Relay SN 1606100100720 to 2012100100663	If no voltage is present at terminals 3 and 4 of proportional controller, check for +8.7 VDC or +10.8 VDC output from dual voltage relay at terminal 9 (switches NC to NO via voltage monitoring relay if 240VAC). If no voltage is present at output and +8.7 VDC is present at terminal 5 and +10.8 VDC is present at terminal 1, replace dual voltage relay.
	DC Power Supply SN 1606100100720 to 2012100100663	If no voltage is present at terminals 1 and 5 of dual voltage relay, check for 24 VDC output from DC power supply. If no voltage is present at output and 208-240 is present at input, replace DC power supply. If 24VDC is present at output but not at terminals 1 or 5 of dual voltage relay, replace in-line resistors of wire harness.
	Heating Element	If 208-240 VAC is present at output of proportional controller terminal 2 but no heat, check for 208-240 VAC at element terminals. Check amp draws at each supply line. If voltage is present but no amp draw, replace element. 1PH, 208 Volts, 26.9 Amps, 7.7 Ohms, 5600 Watts.
	Thermocouple type "J" testing	WITH POWER ON AND THERMOCOUPLE ATTACHED TO THE OVEN CONTROL: Measure the DC millivolt output of the thermocouple. Refer to the chart below for readings. If these are not achieved, replace thermocouple. Temp.°F (°C) — D.C. Millivolts (Approx) 200 (93) — 3.4 250 (121) — 4.9 300 (149) — 6.5 350 (177) — 8.0 400 (204) — 9.5 450 (232) — 11.1 500 (260) — 12.6 550 (288) — 14.2 600 (316) — 15.7

Problem	Cause	Correction
Conveyor will not run	Control Transformer	With the main fan switch (S) on, check for 208/240 VAC at the primary of the transformer. If no voltage is present, check for voltage at the power switch (for Dual Voltage models, also check for voltage through the high limit and voltage select relay). If voltage is present at the primary, check for voltage on the secondary side of transformer (24 VAC). If no 24 VAC present on secondary, check circuit breaker (CB) (if installed) on transformer. If still no secondary voltage, then replace transformer
	Digital Control Board	Check for steady 24 VAC input to the control board at terminals J1 and J2. If no voltage present, then replace transformer. Check for a steady 5-12 VAC output from main control board at J6-2 and J6-1. If unsteady voltage present but a steady 24 VAC input at J1 and J2, replace main control board. If steady output voltage is present at J6-2 and J6-1, continue checks for conveyor motor.
	Conveyor Motor	The GE conveyor motor on the 2501/2502 is a stepper type. The only way to accurately test the unit at this time is by measuring the resistance between the windings. From A+ to A- and from B+ to B- should measure approximately 5.2 ohm. If the motor fails the above test, replace motor.
Conveyor motor runs, but intermittent or no speed control	Transformer	Check 208-240 input voltage to transformer. If no voltage present, check the On/Off switch (S) and the control box Hi-Limit (T1) for continuity. Also check 5 amp fuses (F1, F2) for continuity. If voltage is present, check for 24 VAC output from transformer. If no voltage is present, check circuit breaker (CB) (if installed) on output of transformer. If still no secondary voltage from transformer, replace transformer.
	Digital Control Board	Check for steady 24 VAC input to the control board at terminals J1 and J2. If no voltage present, then replace transformer. Check for a steady 5-12 VAC output from main control board at J6-2 and J6-1. If unsteady voltage present but a steady 24 VAC input at J1 and J2, replace main control board. If steady output voltage is present at J6-2 and J6-1, continue checks for conveyor motor.
	Conveyor Motor	The 4 wire conveyor motor on the 2501/2502 is a stepper type. The only way to accurately test the motor at this time is by measuring the resistance between the windings. From A+ to A- and from B+ to B- should measure approximately 5.2 ohm. If resistance is good, replace digital control board. If the motor fails the above test, replace motor.
No digital display	Transformer	Check 208-240 input voltage to transformer. If no voltage present, check the On/Off switch (S) and the control box Hi-Limit (T1) for continuity. Also check 5 amp fuses (F1, F2) for continuity. Check for 24 VAC at J1 and J2 power into the digital control. Check circuit breaker (CB) (if installed) on output of transformer. If no secondary voltage from transformer, replace transformer. If secondary voltage is present, then replace main control board.

Section 6
Controls

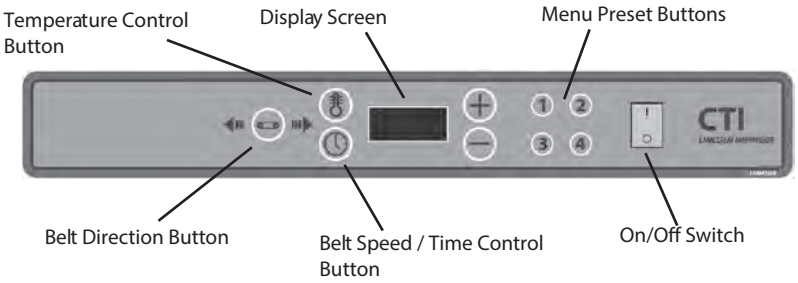

Digital Display Control Panel

> **⚠Warning**
>
> Do not work around conveyor with long hair, loose clothing, or dangling jewelry. Getting caught in the belt could result in serious injury.

Operating Instructions

Prior to operating your new countertop oven, it is important to understand the options available to you. Following is a chart to better illustrate these options.

Controls	Description
Belt Speed / Time Control	Belt speed refers to how quickly the food item travels through the oven. This is shown on the display board as a unit of measure (fast to slow) between :30 seconds and 15:00 minutes.
Temperature Control	The countertop oven will allow you to increase or decrease the desired temperature setting. This is shown on the display board as a unit of measure between 90°F (32°C) - 600°F (316°C).
Belt Direction	The Countertop Oven will allow you to change the direction in which the conveyor belt moves. Pressing the Belt Direction Button will change the direction of travel between left-to-right and right-to-left options.

POWER-UP THE OVEN

1. Turn the on/off switch to the ON position. The oven will now run according to the previously programmed settings.

2. Allow the oven to preheat for approximately 30 minutes.

CHANGE BELT DIRECTION

Press the belt direction button to change the direction in which the conveyor belt travels. (Controller has built in delay - hold for 5-10 seconds until belt stops and changes)

SHUTDOWN

1. Push the on/off switch to the OFF position.
2. As each countertop oven is equipped with a 30-minute cool-down timer, the fan motor will continue to run for 30-minutes after the unit has been turned off. The fan motor will automatically stop at the end of the 30-minute cool-down period.

Programming

PROGRAMMING THE FOUR MENU PRESET BUTTONS

1. Press and hold the desired menu button (1-4) for approximately 5 seconds. The display screen will flash the temperature setpoint. Press the (+) or (-) button to reach the desired temperature.

NOTE: All menu presets come with default settings of Pizza at 550°F / 6:00.

2. Press and release the menu button again to reach the time/belt speed setpoint. The display will flash the time/belt speed setpoint. Press the (+) or (-) button to reach the desired time/belt speed.
3. Press and release the menu button again to reach the menu item name. The display will flash a menu item name. Press the (+) or (-) button to locate the desired name.

NOTE: The following menu items have been preset into the software package of this oven.

- Pizza	- Sandwich	- Wrap
- Wings	- Chicken	- Menu 1
- Breakfast	- Snack	- Menu 2
- Breadsticks	- Lunch	- Menu 3
- Thin Pizza	- Dinner	- Menu 4

4. Once the desired name has been selected, press and release the menu button again to activate the menu setting.

PROGRAMMING THE MANUAL MODE

1. Press and hold the time and temperature buttons for approximately 5 seconds to enter manual mode.

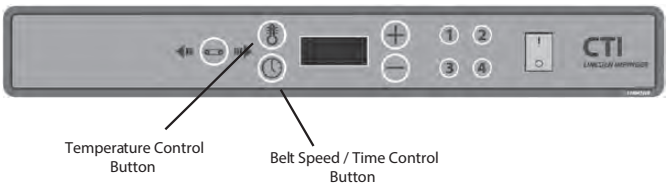

2. Press the time button to allow for changes in time. Press the (+) or (-) button to reach the desired time.
3. Press and release the temperature button to allow for changes in temperature. Press the (+) or (-) button to reach the desired temperature.

4. Press and release the temperature button again to leave manual mode and activate the manual settings.

PROGRAMMING THE SUBSET MENU

There are three settings that can be accessed by an authorized technician: the temperature calibration setting, temperature display (°F or °C) and the conveyor belt direction.

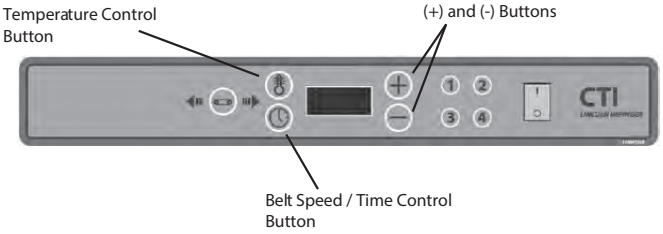

Step 1

To access the subset menu, press and hold the (+) and (-) buttons for approximately 5 seconds. The calibration value will be displayed. If a change to the calibration value is desired, press either the (+) or (-) buttons until the desired value is reached. If no change to calibration value is needed, press the temperature control button to reach the temperature display setting.

Step 2

Complete step 1. To change the temperature display setting between °F and °C, simply press the (+) or (-) button until the desired setting is displayed. If no change to the temperature display setting is needed, press the belt speed / time control button to reach the conveyor belt direction setting.

Step 3

Complete steps 1 and 2. To change the conveyor belt direction, press the (+) or (-) button until the desired belt direction setting is reached. Once reached, press the belt speed /time control button to save the changes and exit the subset menu.

THIS PAGE INTENTIONALLY LEFT BLANK

Section 7
Component Procedures

⚠Warning

Before removing or installing any component in the Digital Countertop Oven, be sure to disconnect all electrical power.

Oven Back

REMOVAL

With Power Off:

1. Remove six (6) screws and remove motor cover and vent piping.
2. Disconnect all wiring from motor and heating element.
3. Remove four (4) nuts holding oven back and remove oven back.
4. Reassemble in reverse order.

NOTE: Be certain to replace insulation seal when oven back is re-installed. (p/n 369470)

Oven Hi-Limit

REPLACEMENT

With Power Off:

1. Remove oven back assembly. (See Oven Back Removal)
2. Remove two (2) wires from thermostat.
3. Remove retaining nut from the front of thermostat and remove thermostat.
4. Remove capillary tube from bracket in back of oven and remove assembly out through control box side.
5. Reassemble in reverse order. Check for proper routing through insulation. Be sure capillary tube is held securely in the bracket and the reset button has been pushed in and set.

NOTE: All excess capillary tubing should be brought back into control box area. Be certain to replace insulation seal when oven back is re-installed. p/n 369470

Thermocouple

REPLACEMENT

With Power Off:

1. Remove conveyor assembly, side panels and front panel.
2. Remove oven back assembly. (See Oven Back Removal)
3. Remove thermocouple sensor from wire form in rear of oven cavity.
4. Disconnect and mark wires from control board (red=neg., white=pos.) and remove thermocouple.
5. Reassemble in reverse order, keeping junction inside the control box and not in the heating cavity. Check operation.

NOTE: Be certain to replace insulation seal when oven back is re-installed. (p/n 369470)

Power Switch

REPLACEMENT

With Power Off:

1. Remove conveyor and oven side panels.
2. Remove screws from ends of control panel and remove panel.
3. Disconnect wires from switch assembly. Mark wires for reinstallation.
4. Depress clips on side of switch and remove from panel.
5. Reassemble in reverse order and check operation.

THERMOSTAT, LAMP (T5)

With Power Off:

1. Remove conveyor and oven sides.
2. Remove screws from ends of control panel and remove panel.
3. Disconnect wires from thermostat. Mark wires for reinstallation.
4. Reassemble in reverse order.

THERMOSTAT , HI -LIMIT CONTROL (T4)

With Power Off:

1. Remove conveyor and oven sides.
2. Remove screws from ends of control panel and remove panel.
3. Disconnect wires from thermostat. Mark wires for reinstallation.
4. Reassemble in reverse order.

Motor Capacitor

REPLACEMENT

With Power Off:

1. Remove six (6) screws and remove motor cover and vent piping.

⚠Warning

DISCHARGE CAPACITOR BEFORE REMOVING WIRES FROM CAPACITOR.

2. Remove wires from capacitor and mark wires for proper reassembly.
3. Loosen clamp around capacitor and remove capacitor.
4. Reassemble in reverse order and check operation.

Main Fan

REPLACEMENT

With Power Off:

1. Remove oven back assembly. (See Oven Back Removal)
2. Loosen two (2) screws on fan hub and slide fan off of motor shaft. (Note location of fan on motor shaft for reinstallation is 3/16" [4.5 mm] from back wall.)
3. Reinstall in reverse order and check system operation. Allow 30 minute preheat and verify that fan is not rubbing.

NOTE: Be certain to replace insulation seal when oven back is re-installed. (p/n 369470)

Heating Element

REPLACEMENT

With Power Off:

1. Remove oven back assembly. (See Oven Back Removal)
2. Remove three (3) screws from heating element brackets and slide element out of back assembly.
3. Reassemble in reverse order. Verify by color code, dot or band on element that correct element is being installed. (Chart is listed in parts manual).

NOTE: Be certain to replace insulation seal when oven back is reinstalled. (p/n 369470)

Air Pump

REPLACEMENT

With Power Off:

1. Remove oven back assembly. (See Oven Back Removal)
2. Remove main fan. (See Main Fan Replacement)
3. Remove heating element. (See Heating Element Replacement)
4. Remove five (5) screws from inner back assembly and lift off.
5. Loosen two (2) screws on air pump hub and slide off shaft. (Note location for reinstallation, approximately 3/64" [1.2 mm] clearance from back wall.)
6. Reinstall in reverse order and check operation.
7. Allow 30 minute preheat and verify that fan is not rubbing.

NOTE: Be certain to replace insulation seal when oven back is reinstalled. (p/n 369470)

Fan Motor

REPLACEMENT

With Power Off:

1. Remove oven back assembly. (See Oven Back Removal)
2. Remove main fan. (See Main Fan Replacement)
3. Remove heating element. (See Heating Element Replacement)
4. Remove air pump assembly. (See Air Pump Replacement)
5. Remove four (4) screws from motor mount pedestal and lift motor and pedestal off outer back assembly.
6. Remove four (4) nuts from front motor studs and remove mounting pedestal.
7. Reassemble in reverse order and check operation.

NOTE: Be certain to replace insulation seal when oven back is re-installed. (p/n 369470)

Conveyor

REMOVE OR ADD SECTION OF BELTING

1. Locate connecting links on the conveyor belt, turn belt to place the links on the top left end of the conveyor, approximately 8" (203 mm) from the shaft.
2. If belt is too tight or loose, a belt link will have to be installed or removed. Proper tension allows the belt to be lifted within 2" (51 mm) from the top of the conveyor opening.
3. You can remove the connecting links by grasping them with a pair of pliers and slipping the eye of the connecting link over the wire of the other belt links. Remember this process for reinstallation.
4. To add a belt link, just insert or snap in one belt link at a time into the last link of the upper section of belting.
5. To remove a belt link, just grasp the end of the last belt link of the upper section and pull out.
6. Reconnect connecting links by reversing process as they were removed.

REPLACE BELTING

1. Remove the connecting links by grasping them with a pair of pliers and slipping the eye of the connecting link over the wire of the other links. *Also notice the direction of the opening on the links. – The belts will have to be reinstalled with the opening facing the same way*.
2. Carefully pull out the belt, rolling it up as you go.
3. To reinstall, put the loose end of the belt around the idler shaft and back on the conveyor. The belt must be routed on top of the lower conveyor slider bed.

NOTE: If the belting does not curl around the sprockets and lay flat, remove the belting and turn the belting over.

4. Remove belt links as needed for proper tension.
5. Reconnect connecting links by reversing process as they were removed.

Conveyor Sprockets

REPLACEMENT

1. Remove conveyor. See Conveyor above.
2. Remove conveyor belt.
3. Remove appropriate shaft by moving shaft outward until bearing block drops out bottom of frame.
4. Loosen set screw and remove conveyor sprocket.
5. Reassemble in reverse order.

Conveyor Motor

REPLACEMENT

With Power Off:

1. Remove conveyor (see Installation, Operation and Maintenance manual).
2. Remove screw from center of coupling sleeve assembly and slide coupling assembly off motor shaft.
3. Remove control box cover.
4. Disconnect motor wires. Mark wires for proper reassembly.
5. Remove four (4) mounting screws and replace motor.
6. Reassemble in reverse order and check operation.

NOTE: Check to ensure coupling and motor shaft are aligned.

Transformer

REPLACEMENT

With Power Off:

1. Remove control box cover.
2. Disconnect wires from transformer. Mark wires for proper reassembly.
3. Remove mounting screws and replace transformer.
4. Reassemble in reverse order and check operation.

Contactor

REPLACEMENT

With Power Off:

1. Remove control box cover.
2. Disconnect wires from contactor. Mark wires for proper reassembly.
3. Remove mounting screws and replace contactor.
4. Reassemble in reverse order and check operation.

Conveyor Bearings

REPLACEMENT

With Power Off:

1. Remove conveyor from oven and place on a firm work surface.
2. Remove conveyor belt. See Conveyor for instruction.
3. Remove appropriate shaft by moving shaft outward until conveyor bearing drops out of conveyor frame.
4. Remove conveyor bearing from conveyor shaft.
5. Reassemble in reverse order and check operation.

Main Control

REPLACEMENT

With Power Off:

1. Remove conveyor and side panels.
2. Remove screws from ends of control panel and remove control panel.
3. Disconnect wiring from main control. Mark all wires for proper reassembly.
4. Remove main control from control panel.
5. Reassemble in reverse order and check operation.

NOTE: See *Section 6* for Programming.

NOTE: Controller Dip-switches are all "OFF".

Proportional Controller

REPLACEMENT

With Power Off:

1. Remove control box cover.
2. Disconnect wires from proportional controller. Mark wires for proper reassembly.
3. Remove mounting screws and replace proportional controller.
4. Reassemble in reverse order and check operation.

Membrane

REPLACEMENT

With Power Off:

1. Remove conveyor and side panels.
2. Remove screws from ends of control panel and remove control panel.
3. Disconnect ribbon cable from main control board.
4. Remove membrane from control panel.
5. Remove all old adhesive from control panel.
6. Remove backing from new membrane and mount new membrane to control panel.
7. Reassemble in reverse order and check operation.

Solid State Relay

REPLACEMENT

With Power Off:

1. Remove control box cover.
2. Disconnect wiring from solid state relay. Mark all wires for proper reassembly.
3. Remove mounting screws and replace solid state relay.
4. Reassemble in reverse order and check operation.

Cooling Fan Thermostat

REPLACEMENT

With Power Off:

1. Remove control box cover.
2. Remove wires from thermostat. Mark all wires for proper reassembly.
3. Remove mounting screws and remove thermostat.
4. Reassemble in reverse order and check operation.

Cooling Fan Motor

REPLACEMENT

With Power Off:

1. Remove control box cover.
2. Remove mounting screws and remove cooling fan and finger guard.
3. Disconnect wiring from cooling fan.
4. Reassemble in reverse order and check operation.

Control Box Hi-Limit

REPLACEMENT

With Power Off:

1. Remove control box cover.
2. Remove wires from hi-limit thermostat. Mark wires for proper reassembly.
3. Remove mounting screws and remove hi-limit thermostat.
4. Reassemble in reverse order and check operation.

Time Delay Relay

REPLACEMENT

With Power Off:

1. Remove control box cover.
2. Disconnect wiring from time delay relay. Mark wires for proper reassembly.
3. Remove mounting screw and replace time delay relay.
4. Reassemble in reverse order and check operation.

Main Fan Relay or Dual Voltage Relay

REPLACEMENT

With Power Off:

1. Remove control box cover.
2. Disconnect wiring from main fan relay. Mark wires for proper reassembly.
3. Remove mounting screw and replace main fan relay.
4. Reassemble in reverse order and check operation.

Voltage Monitoring Relay

REPLACEMENT

With Power Off:

1. Remove control box cover.
2. Remove voltage monitoring relay by pulling outwards to separate it from base.
3. Verify mounting base is sound and wire connections are good.
4. Reassemble in reverse order and check operation.

Air Pressure Switch

REPLACEMENT

With Power Off:

1. Remove control box cover.
2. Disconnect tube from air pressure switch.
3. Disconnect wiring from air pressure switch. Mark wires for proper reassembly.
4. Remove mounting screws and replace air pressure switch.
5. Reassemble in reverse order and check operation.

AIR PRESSURE SWITCH – ADJUSTMENT

1. Apply power to oven, set temperature to max. and allow 30 minute preheat for temperature to stabilize.
2. Remove air tube and, using a voltmeter, verify that contactor for heater element opens.
3. WITH POWER ON: Reconnect tube and check voltage across the air pressure switch, making sure that there is no voltage drop and it remains steady. Adjust as needed.

NOTE: Allow 30 minutes to preheat.

Fuse Holder

REPLACEMENT

With Power Off:

1. Remove control box cover.
2. Remove wires from appropriate fuse holder. Mark wires for proper reassembly.
3. Remove mounting nut from fuse holder.
4. Reassemble in reverse order and check operation.

DC Power Supply

REPLACEMENT

With Power Off:

1. Remove control box cover.
2. Disconnect wiring from DC power supply. Mark wires for proper reassembly.
3. Remove mounting screws and replace DC power supply.
4. Reassemble in reverse order and check operation.

THIS PAGE INTENTIONALLY LEFT BLANK

Section 8
Charts

Utility Specifications

Model No.	Motor RPM	Input Rate	Voltage	Amps	Hz	Phase	No. of wires
2500-000 (Dual Volt)	3100	6 kW	208-240	27	60	1	3
2500-202 (Dual Volt)	1750	6 kW	208-240	27	60	1	3
2501-000	3100	6 kW	208	27	60	1	3
2501-001 (Quiet)	1750	6 kW	208	27	60	1	3
2502-000	3100	6 kW	240	24	60	1	3
2502-001 (Quiet)	1750	6 kW	240	24	60	1	3
2504-000	3100	6 kW	240	24	50	1	3
2504-001 (Quiet)	1750	6 kW	240	24	50	1	3
2505-000	3100	6 kW	380/220	15	50	1	4
2507-000	3100	6 kW	200	16	50/60	3	5
2508-000	3100	6 kW	380/220	9	50	3	5
2509-000	3100	6 kW	415/240	8	50	3	5
2510-000	3100	6 kW	220	27	60	1	3
2512-000	3100	6 kW	400/230	9	50	3	5
2512-004	3100	6 kW	400/230	9	50	3	5
2514-000	3100	6 kW	240	24	50	1	3

NOTE: Specifications subject to change without notice.

THIS PAGE INTENTIONALLY LEFT BLANK

Section 9
Diagrams

Wiring Schematics

Model 2500
SN 1606100100720 to
SN 2012100100663

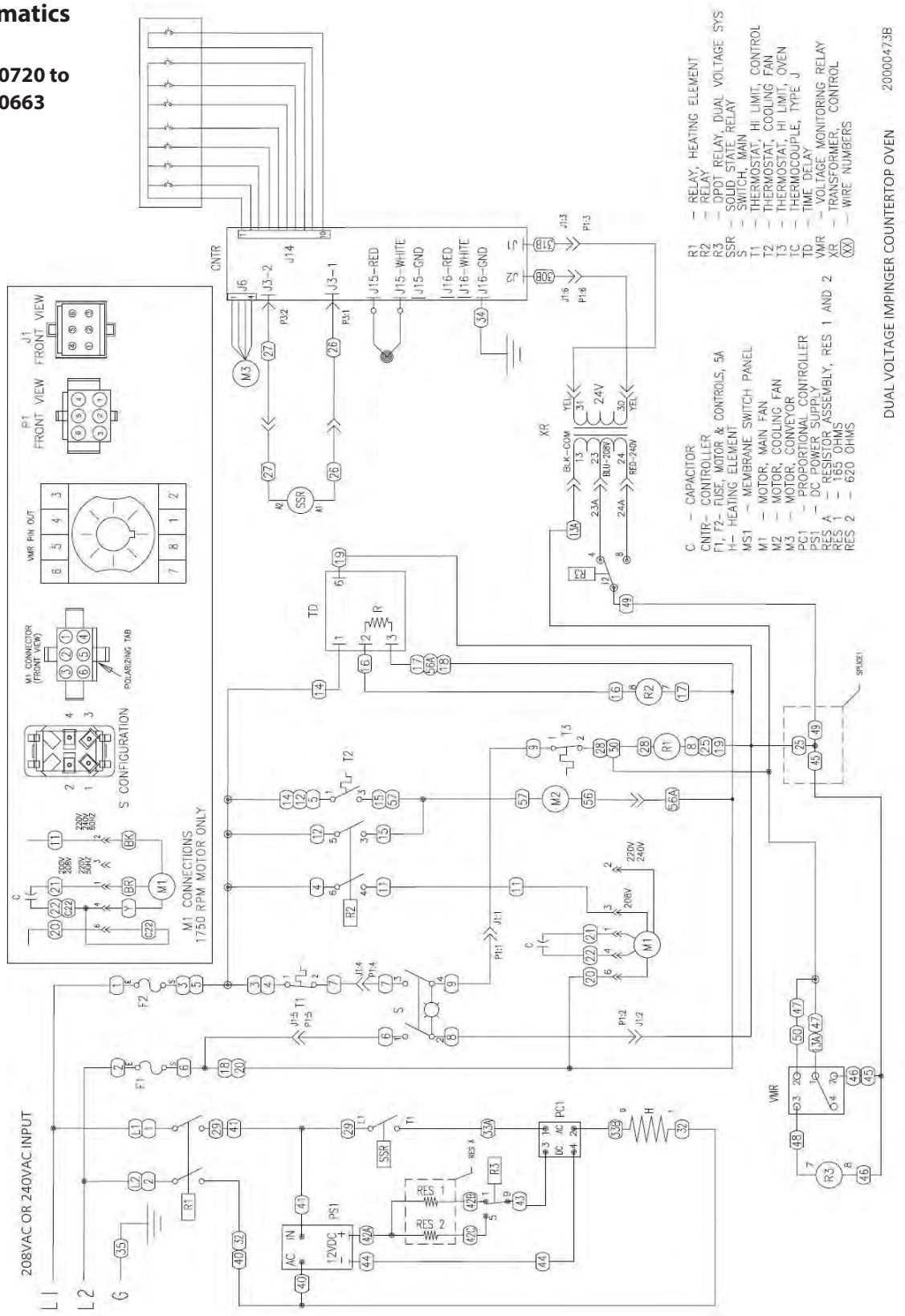

Models 2500
SN2012100100664
and Above

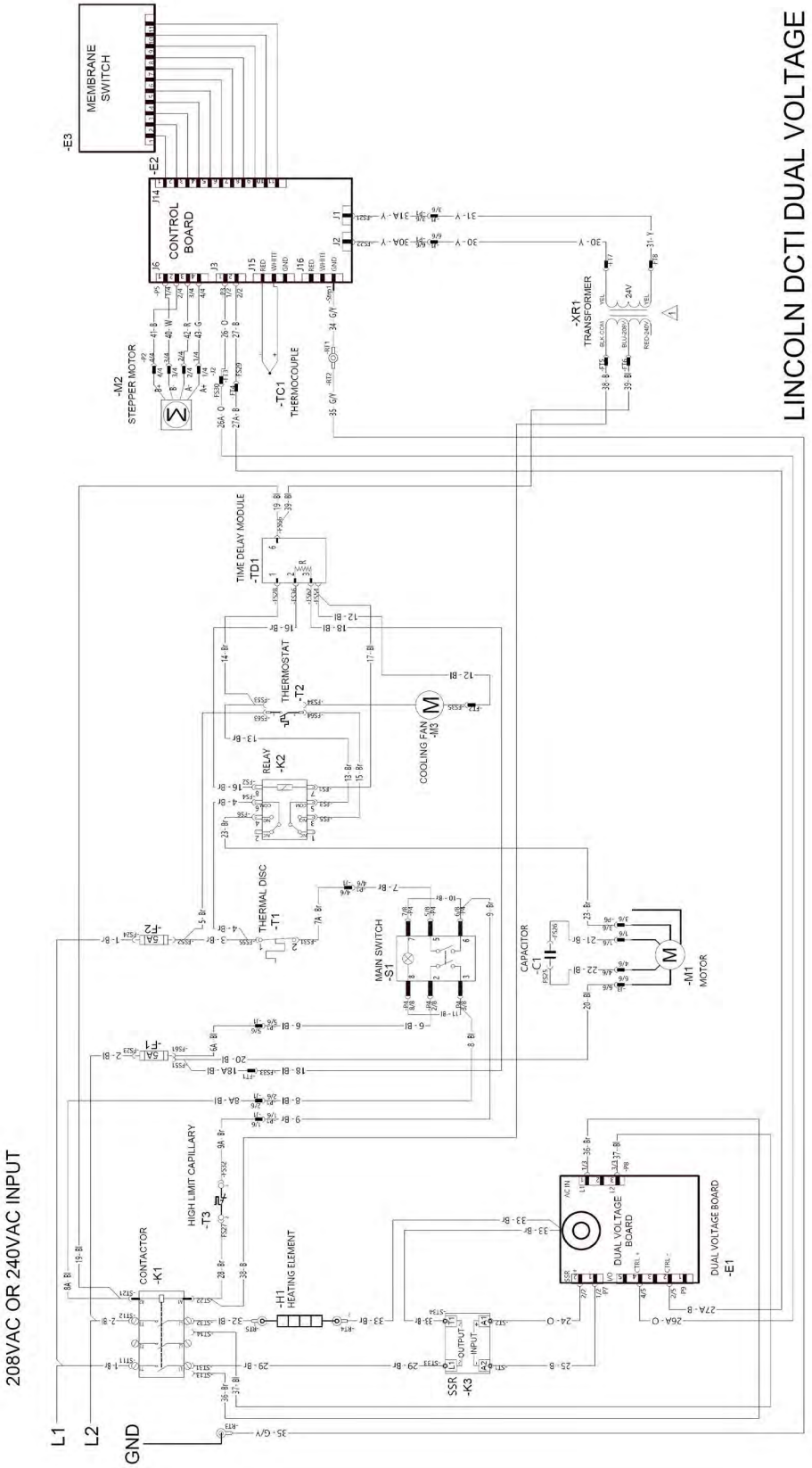

Models 2501, 2502

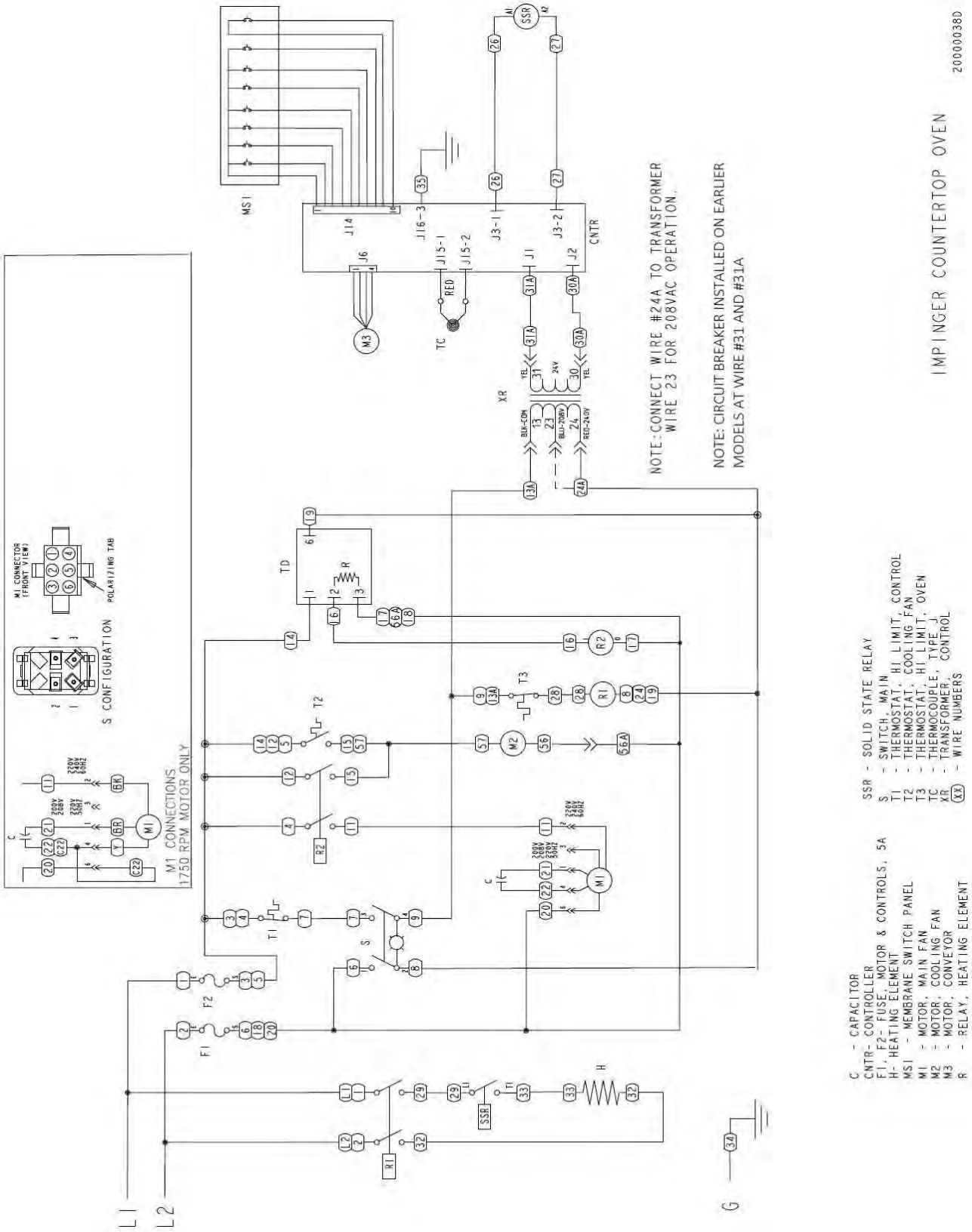

Models 2504, 2510

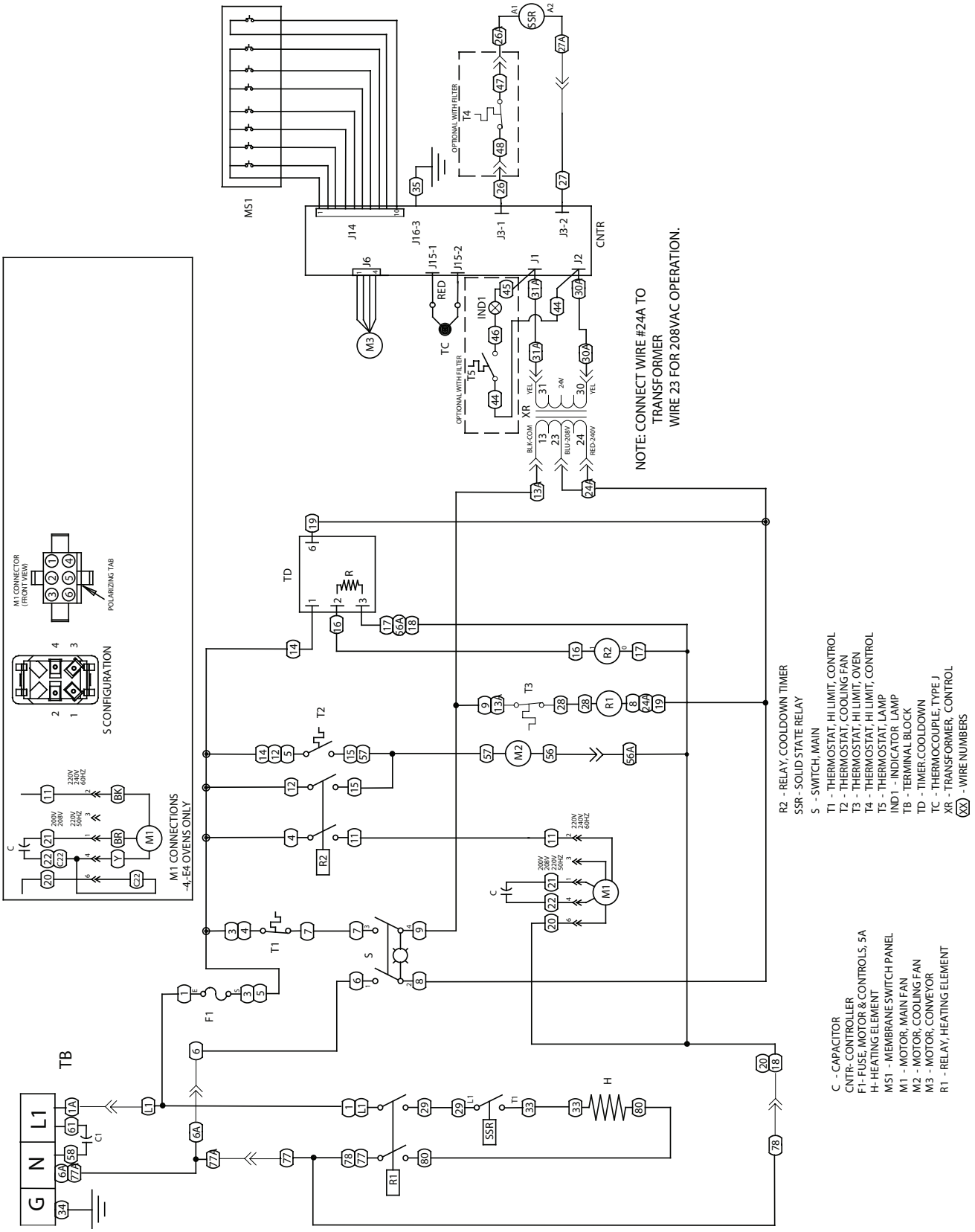

Model 2505

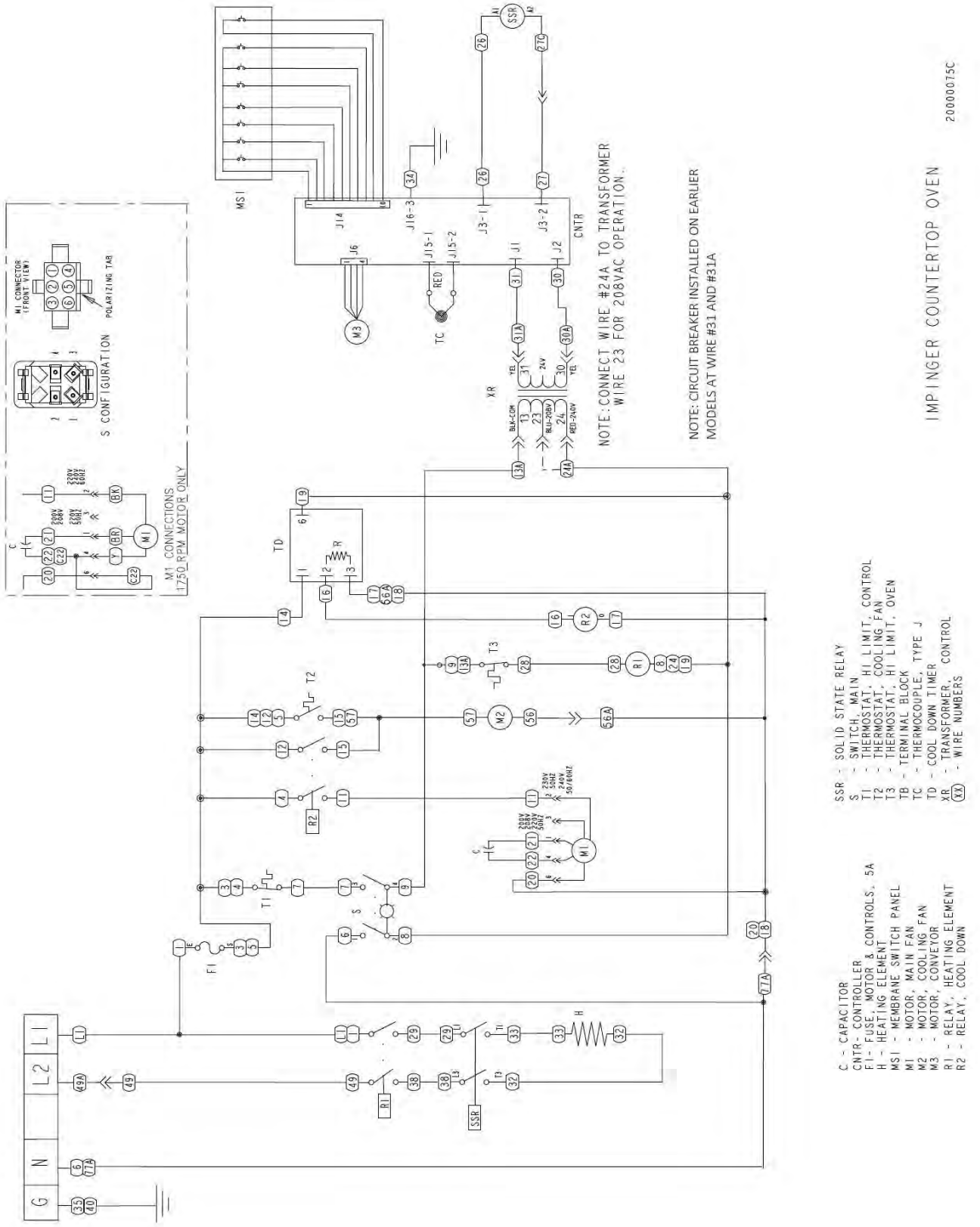
IMPINGER COUNTERTOP OVEN
20000075C
NOTE: CIRCUIT BREAKER INSTALLED ON EARLIER MODELS AT WIRE #31 AND #31A
NOTE: CONNECT WIRE #24A TO TRANSFORMER WIRE 23 FOR 208VAC OPERATION.
M1 CONNECTIONS 1750 RPM MOTOR ONLY
S CONFIGURATION
M1 CONNECTOR (FRONT VIEW)
POLARIZING TAB
MS1
CNTR
J14
J16-3
J15-1
J15-2
J3-1
J3-2
J6
J1
J2
TC
RED
XR
TD
T1
T2
T3
R
R1
R2
M1
M2
M3
S
SSR
FI
H
C - CAPACITOR
CNTR- CONTROLLER
FI- FUSE, MOTOR & CONTROLS, 5A
H - HEATING ELEMENT
MS1 - MEMBRANE SWITCH PANEL
M1 - MOTOR, MAIN FAN
M2 - MOTOR, COOLING FAN
M3 - MOTOR, CONVEYOR
R1 - RELAY, HEATING ELEMENT
R2 - RELAY, COOL DOWN
SSR - SOLID STATE RELAY
S - SWITCH, MAIN
T1 - THERMOSTAT, HI LIMIT, CONTROL
T2 - THERMOSTAT, COOLING FAN
T3 - THERMOSTAT, HI LIMIT, OVEN
TB - TERMINAL BLOCK
TC - THERMOCOUPLE, TYPE J
TD - COOL DOWN TIMER
XR - TRANSFORMER,
(XX) - WIRE NUMBERS
L1
L2
N
G

Model 2507

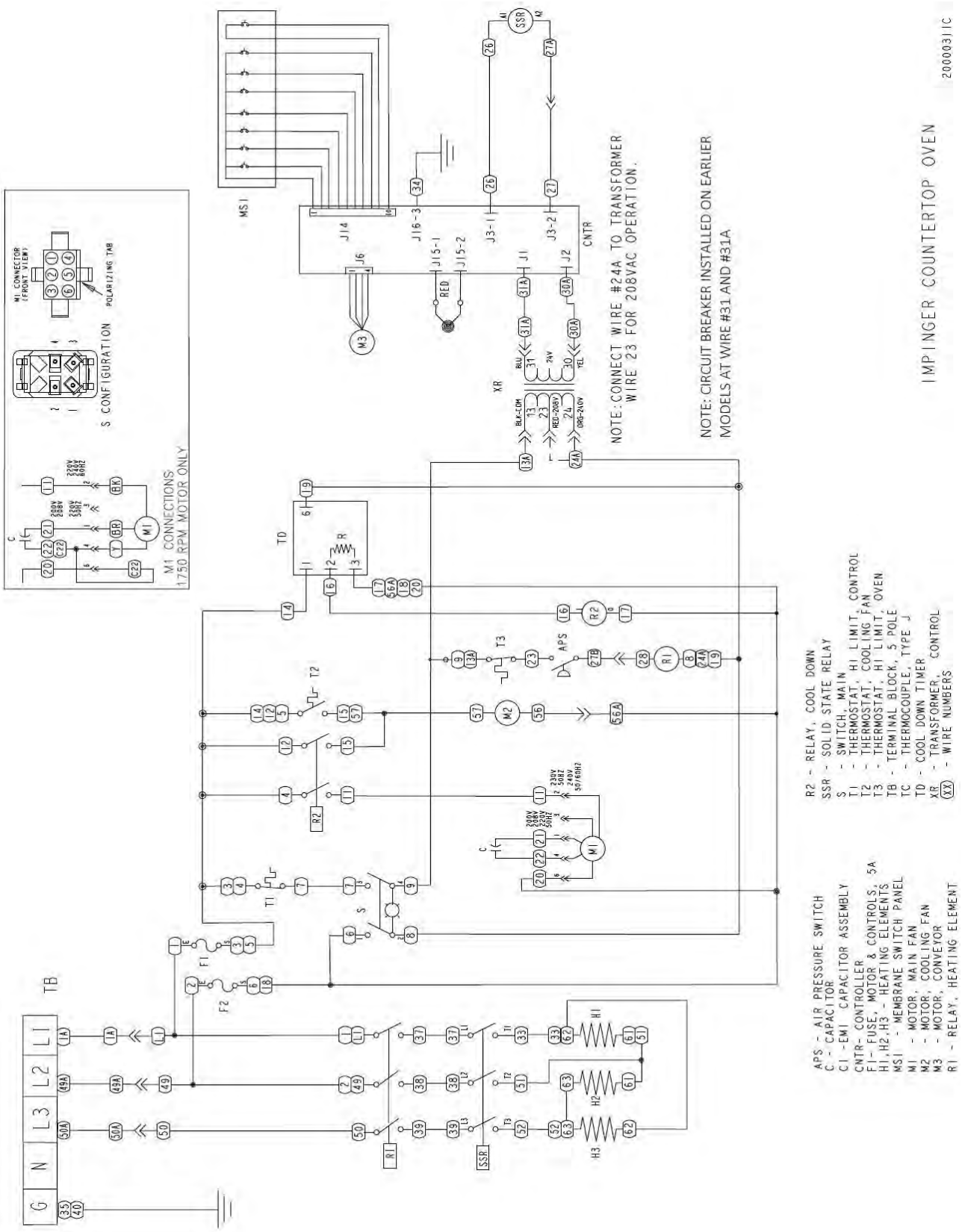
IMPINGER COUNTERTOP OVEN
2000031IC
NOTE: CONNECT WIRE #24A TO TRANSFORMER WIRE 23 FOR 208VAC OPERATION.
NOTE: CIRCUIT BREAKER INSTALLED ON EARLIER MODELS AT WIRE #31 AND #31A
M1 CONNECTIONS 1750 RPM MOTOR ONLY
S CONFIGURATION
M1 CONNECTOR (FRONT VIEW)
POLARIZING TAB
MS1
J14
J16-3
J15-1
J15-2
J3-1
J3-2
J1
J2
CNTR
J6
M3
RED
XR
TD
T1
T2
T3
APS
R1
R2
M1
M2
SSR
TB
G
N
L3
L2
L1
F1
F2
S
H1
H2
H3
APS - AIR PRESSURE SWITCH
C - CAPACITOR
CI - EMI CAPACITOR ASSEMBLY
CNTR- CONTROLLER
F1- FUSE, MOTOR & CONTROLS, 5A
H1,H2,H3 - HEATING ELEMENTS
MS1 - MEMBRANE SWITCH PANEL
M1 - MOTOR, MAIN FAN
M2 - MOTOR, COOLING FAN
M3 - MOTOR, CONVEYOR
R1 - RELAY, HEATING ELEMENT
R2 - RELAY, COOL DOWN
SSR - SOLID STATE RELAY
S - SWITCH, MAIN
T1 - THERMOSTAT, HI LIMIT, CONTROL
T2 - THERMOSTAT, COOLING FAN
T3 - THERMOSTAT, HI LIMIT, OVEN
TB - TERMINAL BLOCK, 5 POLE
TC - THERMOCOUPLE, TYPE J
TD - COOL DOWN TIMER
XR - TRANSFORMER
(XX) - WIRE NUMBERS

Models 2508, 2509

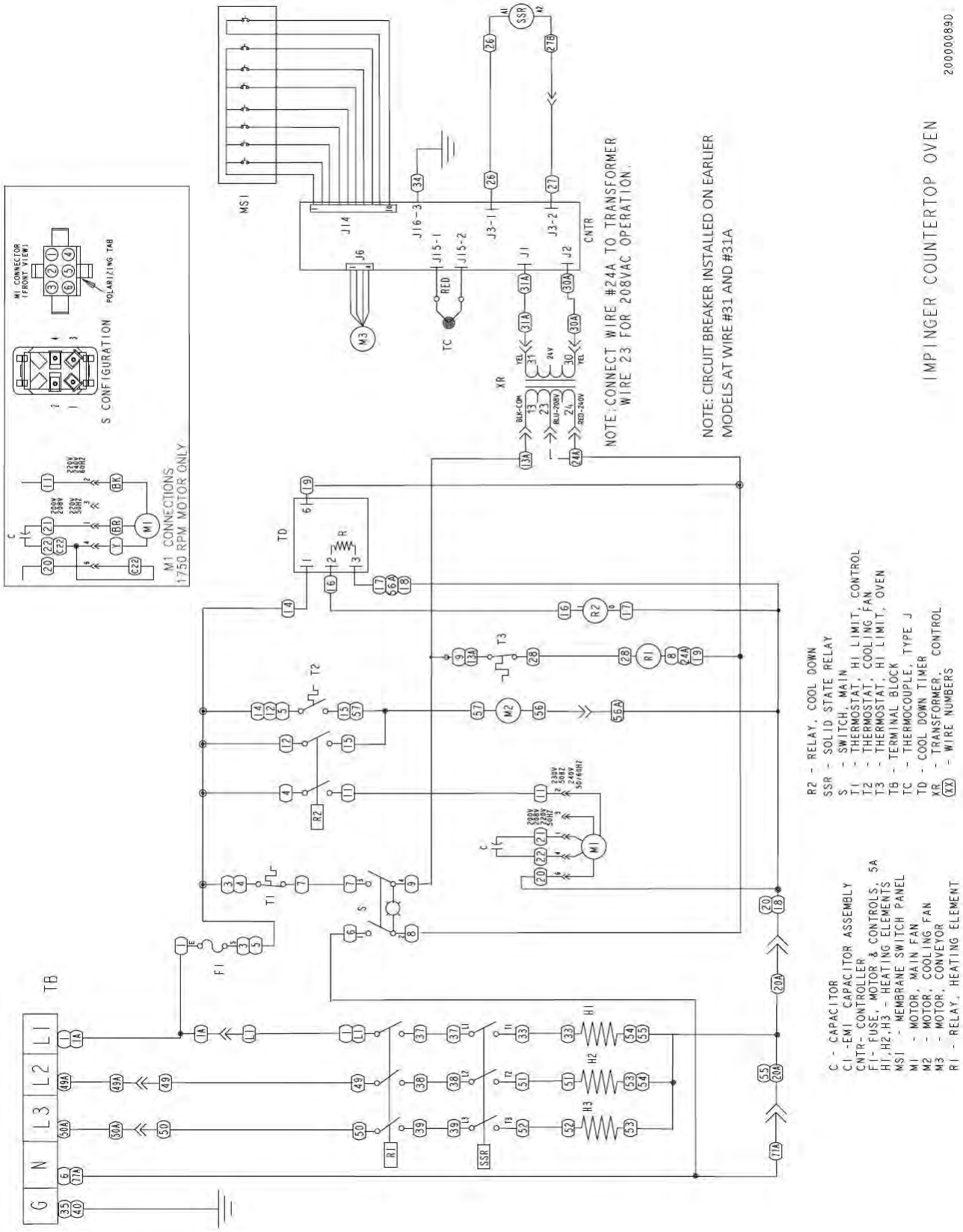

Model 2512

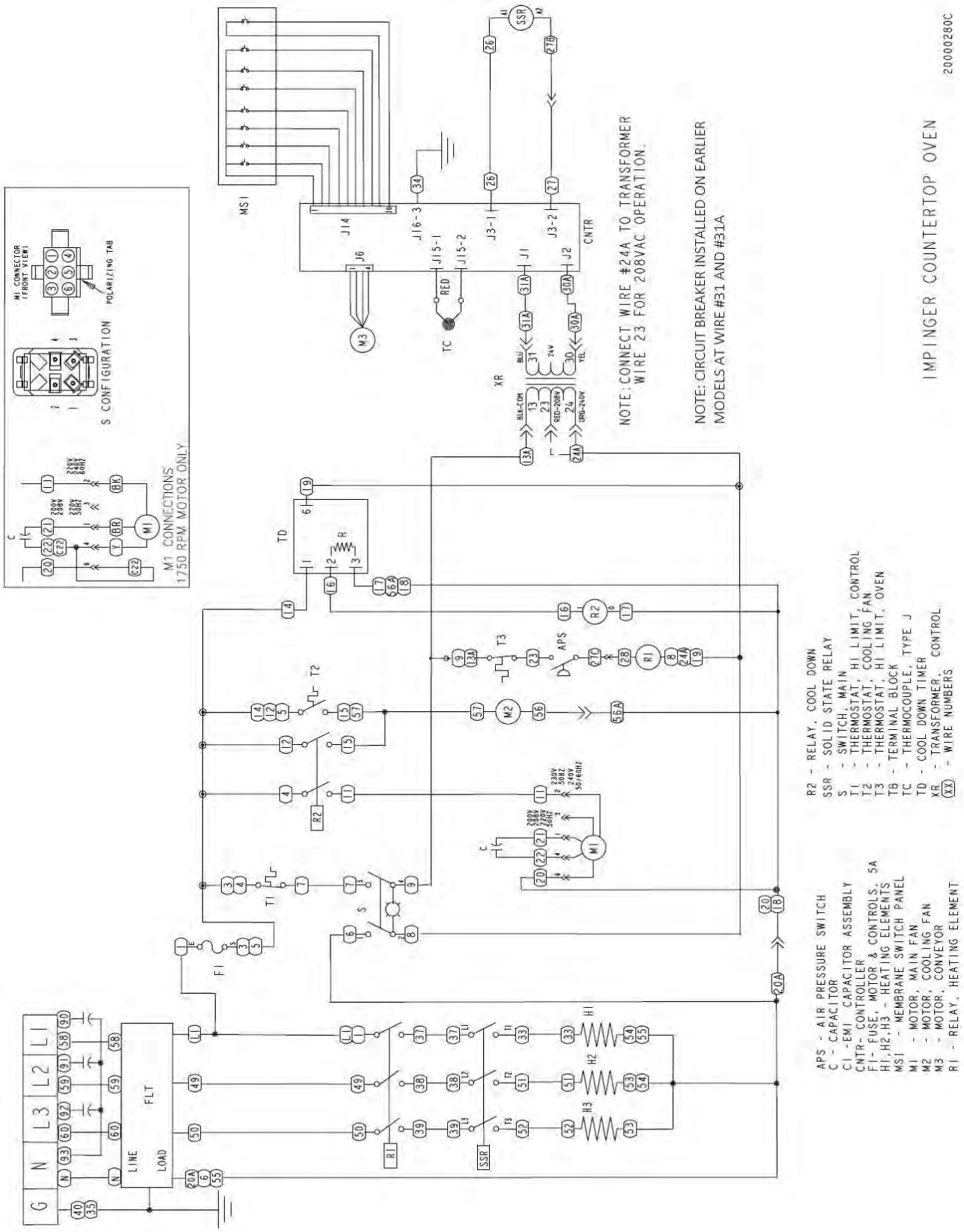
IMPINGER COUNTERTOP OVEN
20000280C
NOTE: CONNECT WIRE #24A TO TRANSFORMER WIRE 23 FOR 208VAC OPERATION.
NOTE: CIRCUIT BREAKER INSTALLED ON EARLIER MODELS AT WIRE #31 AND #31A
M1 CONNECTIONS 1750 RPM MOTOR ONLY
S CONFIGURATION
M1 CONNECTOR (FRONT VIEW)
POLARIZING TAB
APS - AIR PRESSURE SWITCH
C - CAPACITOR
C1 -EMI CAPACITOR ASSEMBLY
CNTR- CONTROLLER
F1- FUSE, MOTOR & CONTROLS, 5A
H1,H2,H3 - HEATING ELEMENTS
MS1 - MEMBRANE SWITCH PANEL
M1 - MOTOR, MAIN FAN
M2 - MOTOR, COOLING FAN
M3 - MOTOR, CONVEYOR
R1 - RELAY, HEATING ELEMENT
R2 - RELAY, COOL DOWN
SSR - SOLID STATE RELAY
S - SWITCH, MAIN
T1 - THERMOSTAT, HI LIMIT, CONTROL
T2 - THERMOSTAT, COOLING FAN
T3 - THERMOSTAT, HI LIMIT, OVEN
TB - TERMINAL BLOCK
TC - THERMOCOUPLE, TYPE J
TD - COOL DOWN TIMER
XR - TRANSFORMER, CONTROL
XX - WIRE NUMBERS

Model 2514

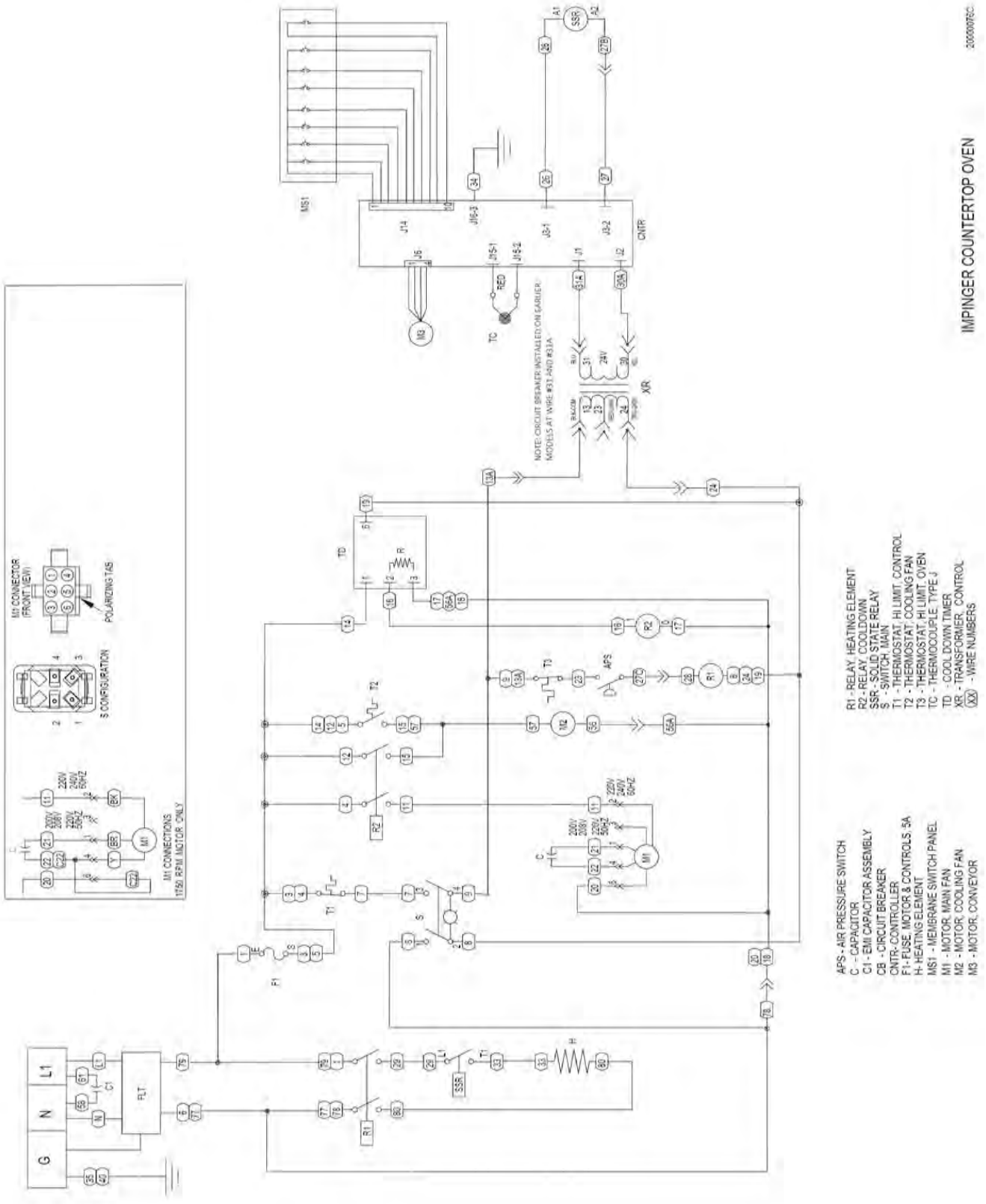
IMPINGER COUNTERTOP OVEN
APS - AIR PRESSURE SWITCH
C - CAPACITOR
C1 - EMI CAPACITOR ASSEMBLY
CB - CIRCUIT BREAKER
CNTR - CONTROLLER
F1 - FUSE, MOTOR & CONTROLS, 5A
H - HEATING ELEMENT
MS1 - MEMBRANE SWITCH PANEL
M1 - MOTOR, MAIN FAN
M2 - MOTOR, COOLING FAN
M3 - MOTOR, CONVEYOR
R1 - RELAY, HEATING ELEMENT
R2 - RELAY, COOLDOWN
SSR - SOLID STATE RELAY
S - SWITCH, MAIN
T1 - THERMOSTAT, HI LIMIT, CONTROL
T2 - THERMOSTAT, COOLING FAN
T3 - THERMOSTAT, HI LIMIT, OVEN
TC - THERMOCOUPLE, TYPE J
TD - COOL DOWN TIMER
XR - TRANSFORMER, CONTROL
XX - WIRE NUMBERS
M1 CONNECTIONS
1750 RPM MOTOR ONLY
M1 CONNECTOR (FRONT VIEW)
POLARIZING TAB
S CONFIGURATION
NOTE: CIRCUIT BREAKER INSTALLED ON EARLIER MODELS AT WIRE #33 AND #33A

Notes

THIS PAGE INTENTIONALLY LEFT BLANK

LINCOLN
1177 KAMATO ROAD, MISSISSAUGA, ONTARIO, CANADA, L4W1X4
844.724.2273
WWW.LINCOLNFP.COM

WELBILT
Bringing innovation to the table

Welbilt offers fully-integrated kitchen systems and our products are backed by KitchenCare® aftermarket parts and service. Welbilt's portfolio of award-winning brands includes **Cleveland™, Convotherm®, Crem®, Delfield®, fitkitchen®, Frymaster®, Garland®, Kolpak®, Lincoln®, Manitowoc®, Merco®, Merrychef® and Multiplex®.**

Bringing innovation to the table • **welbilt.com**

©2020 Welbilt Inc. except where explicitly stated otherwise. All rights reserved.
Document #: LIN_EO_SM_DIGCT_S2500_DOM&INTL_4606010 – 07/21